W.S. Darley & Co.

1051 Palmer Street
Chippewa Falls, WI 54729
Phone (800) 634-7812
Fax (715) 726-2656

325 Spring Lake Dr.
Itasca, IL 60143-2072
Phone (708) 345-8050
Fax (708) 345-8993

LDM PUMP ORDER FORM

Please review the order form before starting. If any challenges arise, please call our Customer Service Department at (800) 634-7812 for assistance. We will be glad to help. Please fill in the information **completely.**

Rated capacity 1000 / 1250 / 1500 / 1750 GPM or LPM (Circle choice)

*If special testing is required, please indicate below.

Imperial Gallons (List Capacity) _____ Liters Per Minute (List Capacity) _____ Other (Specify) _____

P.O. No. _____ Date _____ Account No.: _____

Bill To: _____ Ship To: _____

Desired Delivery Date: _____ Order Completed By: _____ End Customer: _____ Telephone No.: _____

CHASSIS INFORMATION

Chassis Make _____ Wheelbase _____

Model _____ Cab to Axle_____

Engine _____ _____ HP @ _____ RPM Body Width 70”_____72”_____

Transmission Make _____ Model _____ Air Brakes yes _____ no _____

Lowest Gear/Torque Converter Ratio_____ Color _____

Pump Gear Ratio_____ Altitude _____FT.

Control Location: Side Panel _____ Top Console ___ Electrical System 12V _____ 24V _____

PUMP DRIVE SHAFT INFORMATION

Distance Across Lugs	Spicer Yoke Series
4.97	1550
5.31	1610
6.09	1710
7.00	1760
7.55	1810

1. Measure distance across lugs of universal joint yoke to determine Spicer Yoke Series.
2. Circle appropriate size on the left.
3. Spicer Lockon yoke supplied on front and rear of pump.

NOTE: If chassis driveline is not one of Spicer Yokes listed, contact Darley Engineering.

PUMP RATING
(check one)

_____ NFPA 1901 Fire Pump

_____ Other_____

OPTIONAL EQUIPMENT

Qty./Choice	Description
	Enter quantity or choice in column at left.
_____	Handwheel Operated, Manually Vented, Behind-the-Panel Butterfly Valve
_____	Electric Actuated, Automatically Vented, Behind-the-Panel Butterfly Valve (12V only)
_____	Electric Actuated, Manually Vented, Behind-the-Panel Butterfly Valve (12V only)
_____	Inline Handwheel Operated, Manually Vented, Butterfly Valve
_____	Inline Electric Actuated, Automatically Vented, Butterfly Valve (12V only)
_____	Inline Electric Actuated, Manually Vented, Butterfly Valve (12V only)
_____	Inlet Relief, Butterfly Valve
_____	Inline Butterfly Valve Size (Enter 4" or 5” or 6” and Female NPT or Weld at left.)
_____	3” Tank to Pump Check Valve (Check at left and indicate requirements on next page.)
_____	3” 4° Tank to Pump Check Valve (Check at left and indicate requirements on next page.)
_____	2-1/2” NH Female Suction Valve
_____	2-1/2” NH Female “Full Flow” Suction Valve
_____	2-1/2” NH 30° Down Nipple Discharge Valve (mounted on pump)
_____	2-1/2” NH 30° Down Nipple Discharge Valve (shipped loose)
_____	Special thread other than NH
_____	2-1/2” Inline Valve
_____	3/4” Valve Drains. Available on Suction or Discharge Valves
_____	Remote Control for Curb Side Valves
_____	Top Console Bellcrank Valve Control
_____	Supply 4° Flanges where required (to compensate for pump mounted at 4°)
_____	Electric Primer With Primer Valve (Enter at left – 12–Volt or 24–Volt – Qty.- Fluid or Fluidless)
_____	Pressure Relief Valve With Remote Control And Pilot Light
_____	Auto Governor
_____	Suction Relief Valve With Remote Control
_____	Air Power Shift
_____	Manual Override
_____	Manual Shift Indicator Switch
_____	Hand Speed Counter And Cable
_____	Electric Tachometer, Speed Counter And Cable
_____	Master Drain Valve (8 openings)
_____	Isolated Ports Master Drain Valve (6 openings)
_____	Remote Packing Adjustment Cables
_____	High Pressure Second Stage Pump
_____	Pump Overheat Protection System
_____	CAFS
_____	Mechanical Seal

PLEASE ATTACH SPECIAL INSTRUCTIONS TO THIS FORM

W.S. Darley & Co.

LDM PUMP ORDER FORM

CHECK BOX FOR APPROPRIATE CHOICE OF EACH:

1. SUCTION INLET SIZE.
2. SUCTION FLANGE SIZE.
3. DISCHARGE EXTENSION LETTER.
4. INDICATE FLANGE SIZE(IN BOX) OF DISCHARGE EXTENSION FLANGES.
5. DISCHARGE FLANGE SIZE ON DISCHARGE HEAD
6. BODY WIDTH.
7. PUMP FORWARD OR PUMP REAR.
8. BUTTERFLY VALVE OR SPACER.

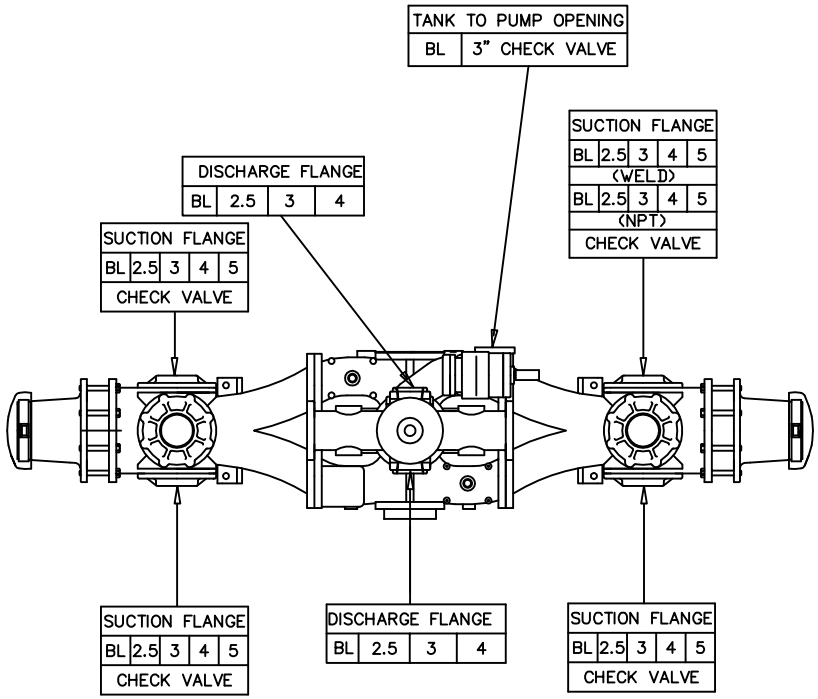

PASS. SIDE FRONT

DR. SIDE FRONT

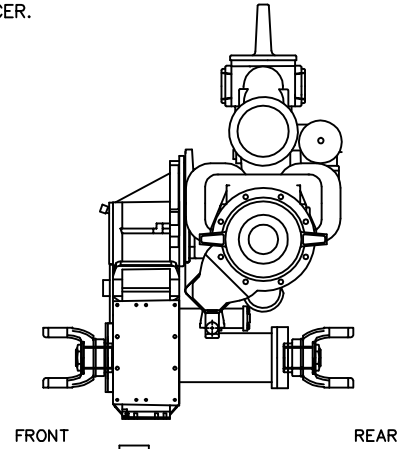

☐ PUMP REAR OF GEARCASE

☐ PUMP FORWARD OF GEARCASE

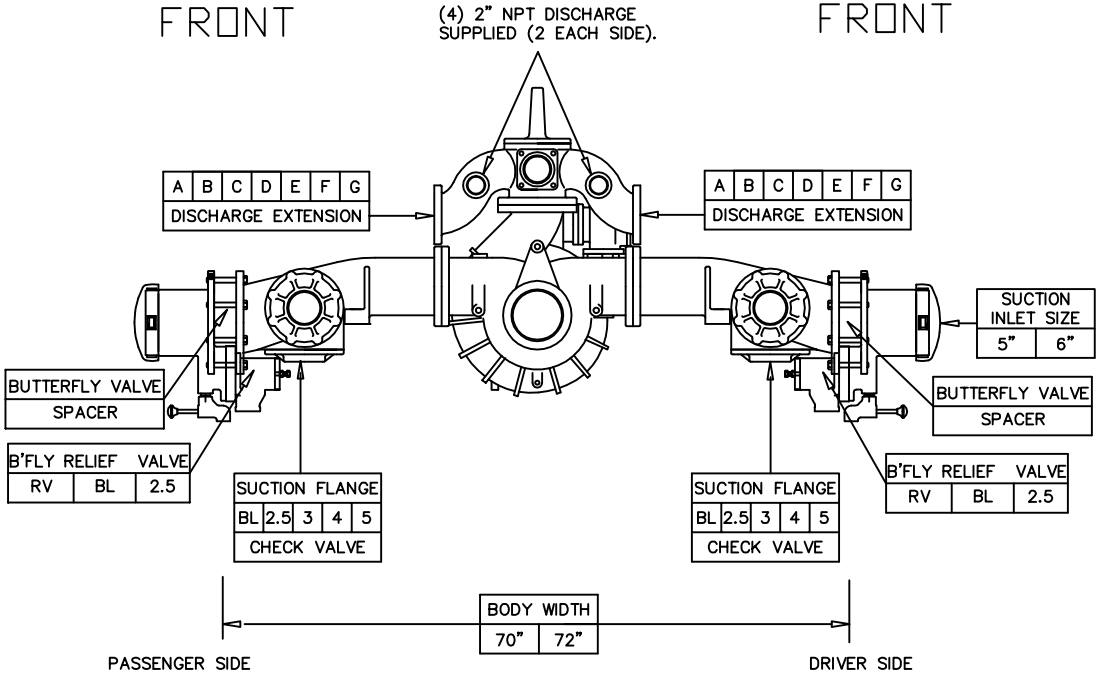

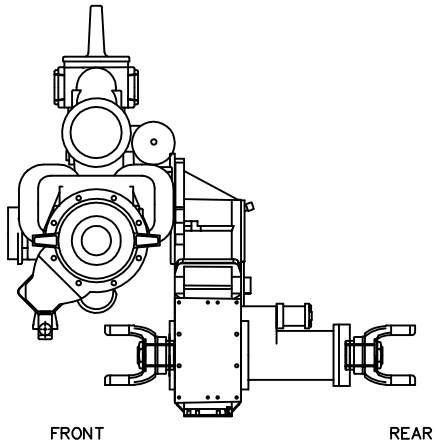

SHEET 3 OF 4

1202002
13JUN2005
REV 6
REV DATE: 08/2010 JJP

W.S. Darley & Co.

LDM PUMP ORDER FORM

DISCHARGE EXTENSIONS

INDICATE REQUIRED COMPANION FLANGE
SIZE IN BOX CORRESPONDING TO
DISCHARGE EXTENSION SELECTED.
AVAILABLE FLANGE SIZES: 1 1/2", 2", 2 1/2", 3".

(FOR AKRON VALVES & LDH)

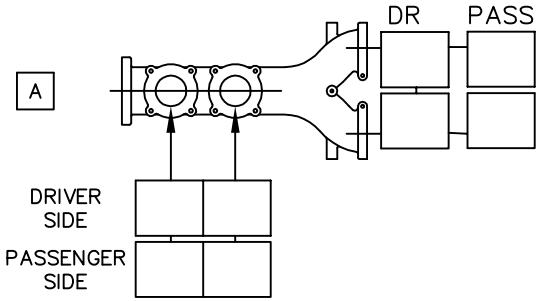

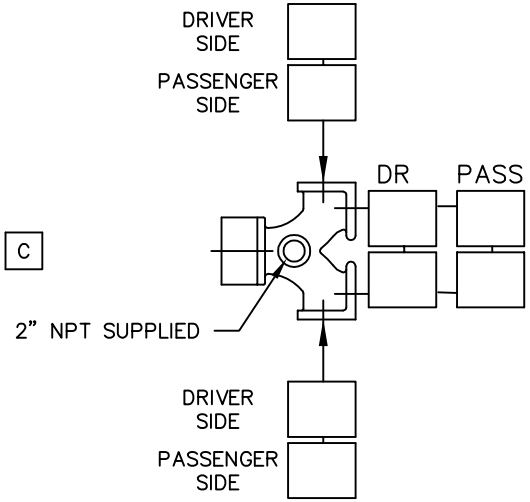

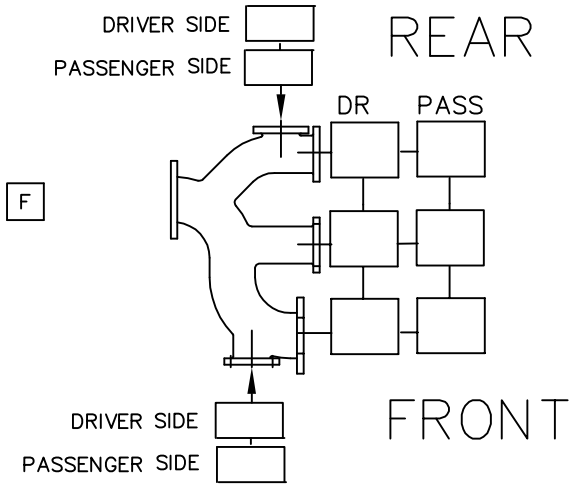

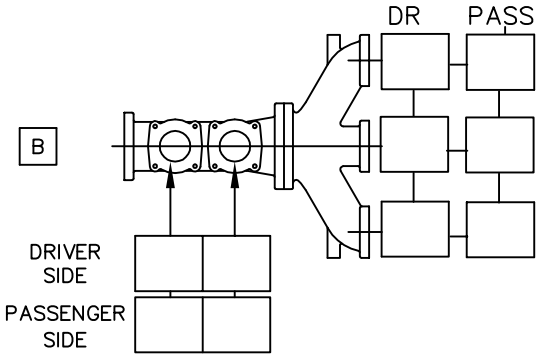

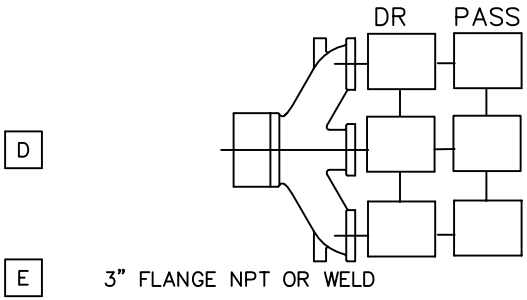

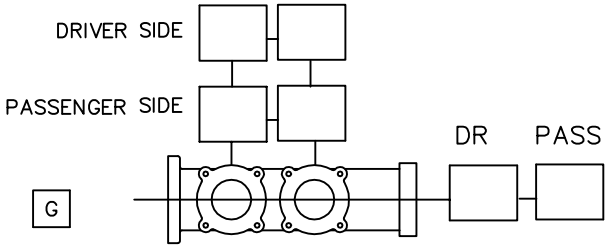

SHEET 4 OF 4

1202002
13JUN2005
REV 6
REV DATE: 08/2010 JJP